RevNo	Revision note	Date	Signature	Checked

ITEM NUMBER	QTY	PART NUMBER	PART NAME	REV
1	2	FC-24-21548-2-BGF	Bolt Gripper Finger	A
2	1	MHZL2-16D	Shuttle Cylinder	N/A
3	1	FC-24-21548-2-GMP	Gripper Mount Plate	A
4	1	MXQ16A-75ZG	Gripper Cylinder	N/A
5	1	FC-24-21548-2-SMP	Shuttle Mount Plate	A
6	1	FC-24-21548-2-SRI	Shuttle Riser	A
7	1	FC-24-21548-2-RBP	Riser Base Plate	A

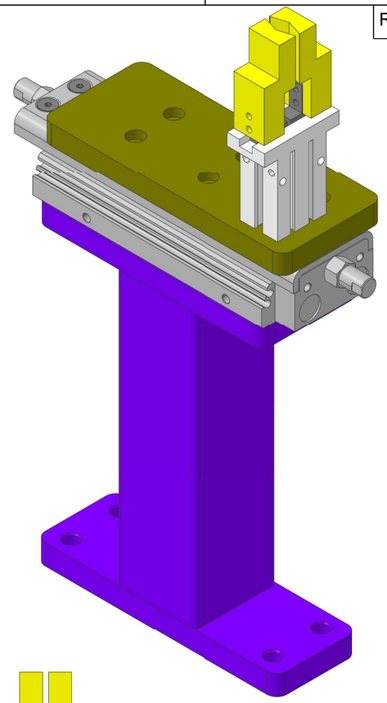

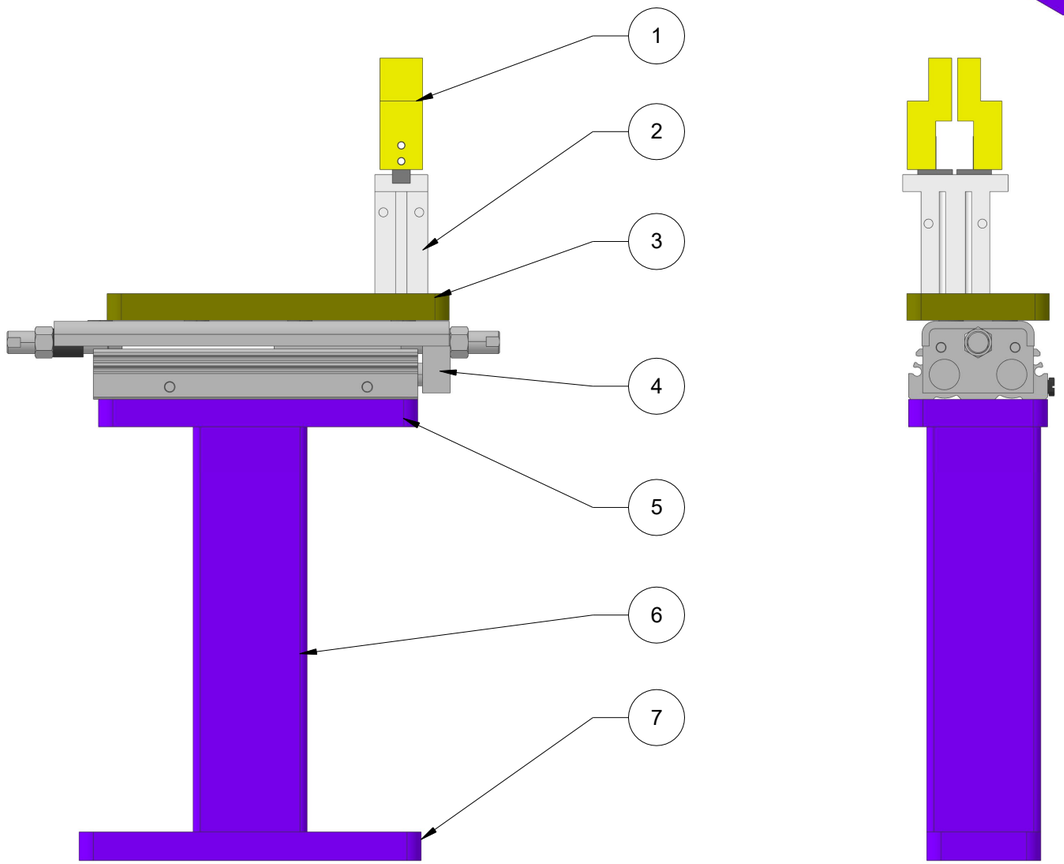

Itemref	Quantity	Title/Name, designation, material, dimension etc			Article No./Reference	
Drawn by D. BADER		Checked by	Approved by - date	File name	Date JUNE 25TH, 2025	Scale 1:1

FEEDING CONCEPTS, INC.
Automatic Parts Feeding Equipment
15235 Herriman Blvd.
Noblesville, IN 46060
(317) 773-2040

BOLT GRIP & SHUTTLE ASSEMBLY

ERGONOMIC PARTNERS FC-24-21548-2	Edition REV. A	Sheet 1 OF 1